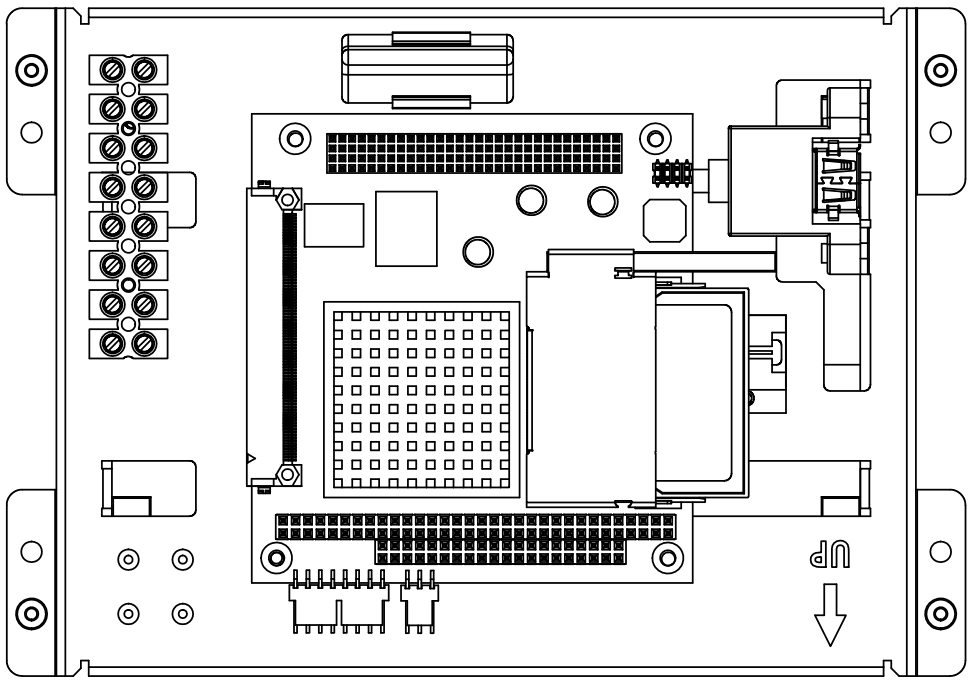
UP

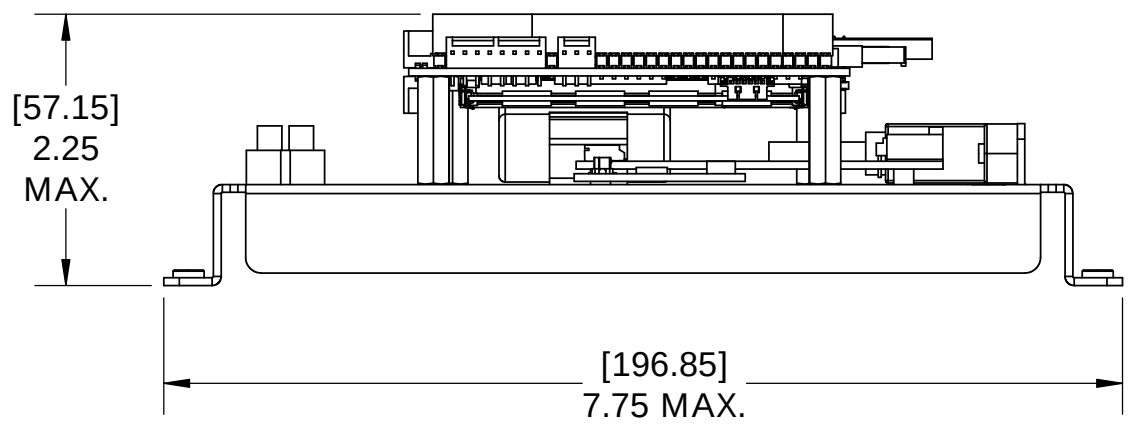
[57.15]
2.25
MAX.
[196.85]
7.75 MAX.

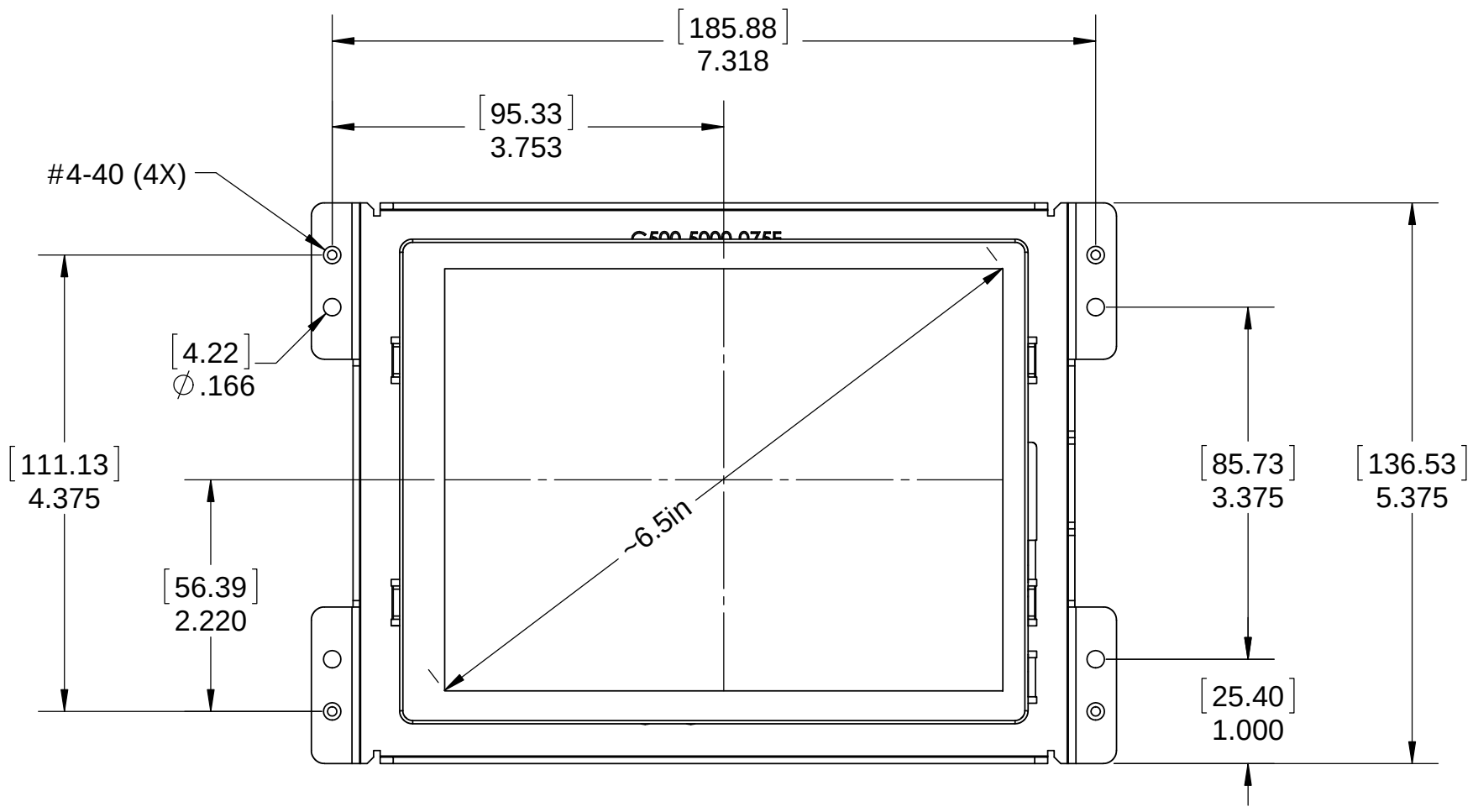
[185.88]
7.318
[95.33]
3.753
#4-40 (4X)
[4.22]
∅.166
[111.13]
4.375
[56.39]
2.220
~6.5in
[85.73]
3.375
[136.53]
5.375
[25.40]
1.000