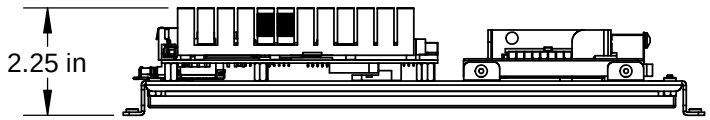
2.25 in

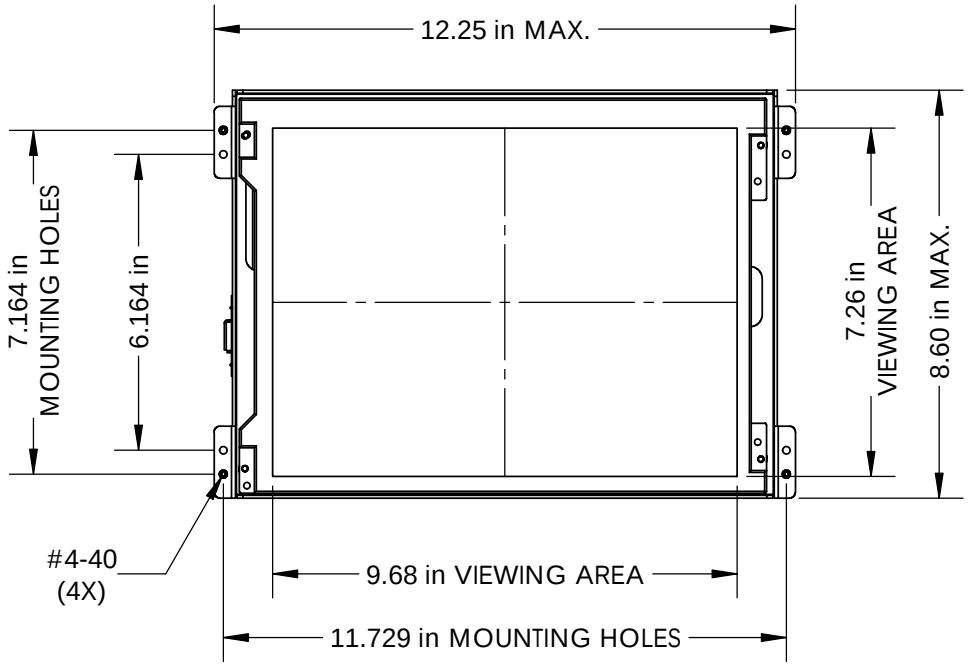
12.25 in MAX.
7.164 in
MOUNTING HOLES
6.164 in
7.26 in
VIEWING AREA
8.60 in MAX.
#4-40
(4X)
9.68 in VIEWING AREA
11.729 in MOUNTING HOLES