PCM-MIO-G -DA-1

12-Bit Digital-to-Analog and 48-Lines of Digital I/O PC/104 Module

Features

- Eight, 12-bit Digital-to-Analog converters (DAC)
- Output ranges: 0-5V, 0-10V, ±2.5V ±5V, ±10V, and -2.5V to 7.5V
- Each channel independently software programmable
- Each channel can be updated and cleared individually or simultaneously
- No calibration needed
- 48 Bidirectional digital I/O lines with Input, Output, or Output with Readback, and 24 capable of event sense interrupt generation
- 12mA sink current per line
- Compatible with industry-standard I/O racks
- Software programmable interrupt configuration
- Standard 0.100" headers for easy cable access
- Operating temperature: -40°C to +85°C
- +5VDC operation
- 3.6 x 3.8 Inches (90 x 96mm)
- Custom OEM configurations available

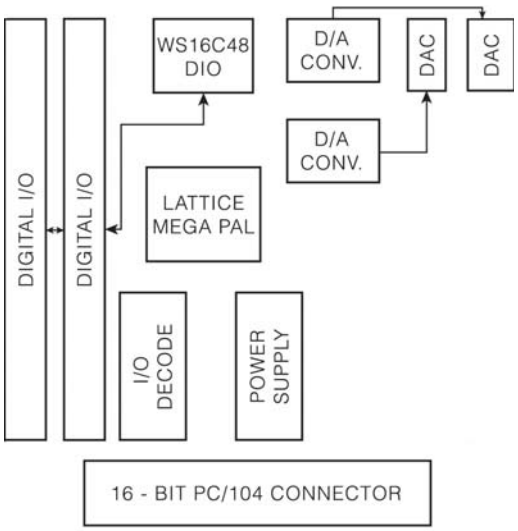

PCM-MIO-G-DA-1 Block Diagram

Product Description

The PCM-MIO-G-DA-1 is a versatile PC/104-based, analog output and digital I/O board designed for high-channel count D/A and digital I/O. The board is based upon precision D/A converters and voltage references which require no external calibration. The digital I/O utilizes WinSystems' versatile WS16C48 implementation, also available on many of our SBCs and other I/O products.

Analog Output - The PCM-MIO-G-DA-1 uses two Linear Technologies SoftSpan™ quad Digital-to-Analog converters (DACs). These eight independent, 12-bit D/A channels have six output voltage ranges of 0-5V, 0-10V, ±2.5V ±5V, ±10V, and -2.5V to 7.5V. They are software programmable for either unipolar or bipolar mode plus specific voltage range on a per channel basis. Each channel is asynchronously cleared to 0V for all ranges when reset.

Onboard DC/DC Power Supplies - The PCM-MIO-G-AD-1 contains an ultra low-noise power supply, which is designed to reduce both conducted and radiated EMI. A separate regulator is used for the converters to minimize digital switching noise. The result is a stable low-noise voltage on all supply rails.

PCM-MIO-G-DA-1: DAC and DIO PC/104 Module

Digital Input/Output - The PCM-MIO-G-DA-1 implements WinSystems' highly-versatile WS16C48, 48-line digital I/O controller. There are 48 bits of TTL-compatible digital I/O. Each I/O line is individually programmable for input, output, or output with readback operation. Each output channel is latched and has an open collector driver with a pull-up resistor capable of sinking 12mA of current. This allows direct control of up to 48 opto-isolated signal conditioning modules to a single card for high density digital I/O support.

A key feature of the WS16C48 controller is its ability to monitor all twenty-four lines of Port 0, 1, and 2 for either rising or falling digital edge transitions, latch them and then interrupt the host processor notifying it that a change-of-input status has occurred. Transition polarity is programmable and enabled on a bit-by-bit basis. Each line's transition is latched by the event so that even short duration pulses will be recognized.

Interrupts - Each interrupt source can be selected and enabled or disabled by the user under software control. This increases flexibility and reduces the need for on board jumpers.

PC/104 Interface - The PCM-MIO-G-DA-1is I/O mapped, requiring 32 sequential port addresses. The addresses are jumper selectable on any even 32-port boundary. The control, data, and power signals are wired to a 16-bit stackthrough PC/104 connector.

I/O Connectors - The analog channels are wired to a 34-pin connector that uses standard 0.100-inch pin spacing. The digital I/O lines are connected to two, 50-pin connectors. A +5 volt source can be jumper enabled on pin 49 of each connector to supply logic power for the I/O module racks or other interface electronics. The pinout is compatible with industry-standard I/O module mounting racks and WinSystems' termination cards.

Custom OEM Configurations - WinSystems can change the functionality and number of analog input or output channels. Please contact an Applications Engineer with your requirements.

Software - Software drivers are available for DOS, Windows®, and Linux. Contact an Applications Engineer or visit our website for details.

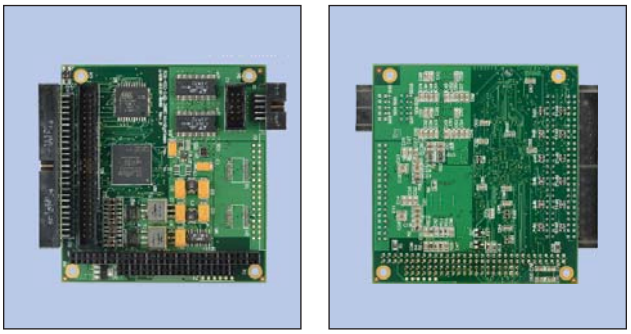

Front and Back Picture of PCM-MIO-G-DA-1

Technical Specifications

Electrical

PC/104 Bus	16-bit, stackthrough
Voltage	+5V ±5% @ 490mA (typ.) All outputs unloaded.

Analog Output

Outputs	Eight channels
Range	0-5V, 0-10V, ±2.5V ±5V, ±10V, and -2.5V to 7.5V
Resolution	12-bits
Settling Time	2uS to 0.1% full scale step
Output Current	10mA per output (typical) with 30mA maximum per board

Digital I/O

Type	48 bits organized in six, 8-byte segments
Logic	TTL-compatible with 12mA sink

Connectors

D/A	Two, 10-pin on 0.100" grid
Digital I/O	Two, 50-pin on 0.100" grid
PC/104	64-pin, 0.100" (32-pin double row)
	40-pin, 0.100" (20-pin double row)

Environmental

Operating Temperature: -40° to +85° Celsius
RoHS Compliant

Mechanical

Dimensions	3.6 x 3.8 inches (90 x 96mm)
Weight	3.02 oz (85.73 gm)

Ordering Information

(See website for complete ordering information and accessories.)

PCM-MIO-G-DA-1	PC/104 Octal D/A and 48-line digital I/O board

WinSystems®
An Employee-Owned Company